PG79386 PG79385 PG79382 4.5V to 16V, 15A eFuse with Hot Swap Protection and Current Monitoring

Features

- Wide input voltage range: 4.5V to 16V
- Integrated 2.7mΩ Pass MOSFET
- Adjustable 2A to 15A current limit
- Adjustable over-current blanking timer for load transient without tripping
- Accurate current monitor
- Configurable fault response
  - Latch-off or auto-retry
  - Number of retries
  - Delay between retries
- Fast trip short-circuit protection: <400ns typical
- Adjustable output slew rate
- Adjustable input under-voltage lockout
- Input over-voltage protection (fixed 7.6V, 16.5V or no OVP options)
- Adjustable load detect and handshake timer
- Integrated overtemperature protection
- RoHS compliant and Green

Description

The PG79386 family of eFuses is an active circuit protection device with integrated MOSFET used to limit current and voltage to safe levels during fault conditions.

The current limit level can be set with a resistor between ILIM and ground, and the typical current limit accuracy is ±1.5% at 25°C.

The device has input over voltage protection feature to protect output load in the event of input over voltage fault.

To limit the inrush current during device turn-on, the rising slew rate of output voltage can be set by a capacitor between dV/dT and ground.

In addition, the device has adjustable over-current blanking timer to avoid over-current tripping during output load transient.

The device also offers EN on/off control and input UVLO features.

The device is available in LGA-26, 4x4 mm package.

Applications

- Server and AUX supplies
- PCI and PCIe cards
- Router and switch optical module
- Digital TV

Typical Application Circuit

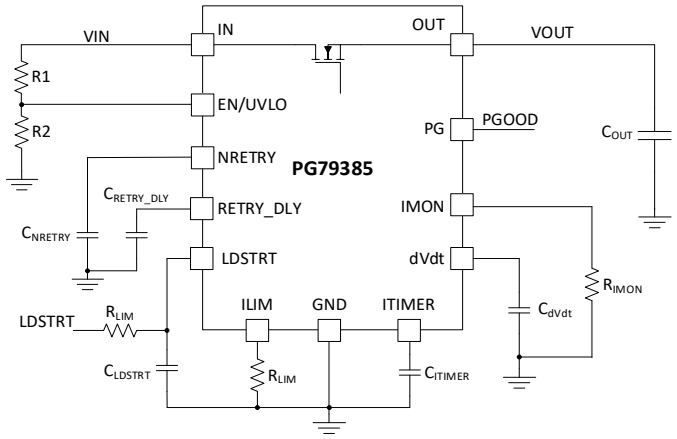

IPG SEMICONDUCTOR (SHENZHEN) CO.,LTD. All rights reserved.